FILE: N:\Group Folders\Engineering\AutoCAD\AutoCAD DWGS\SOM\Form Liner\Web\SOM449.pdf

☒ SINGLE USE
☒ MEDIUM USE
☒ HIGH USE

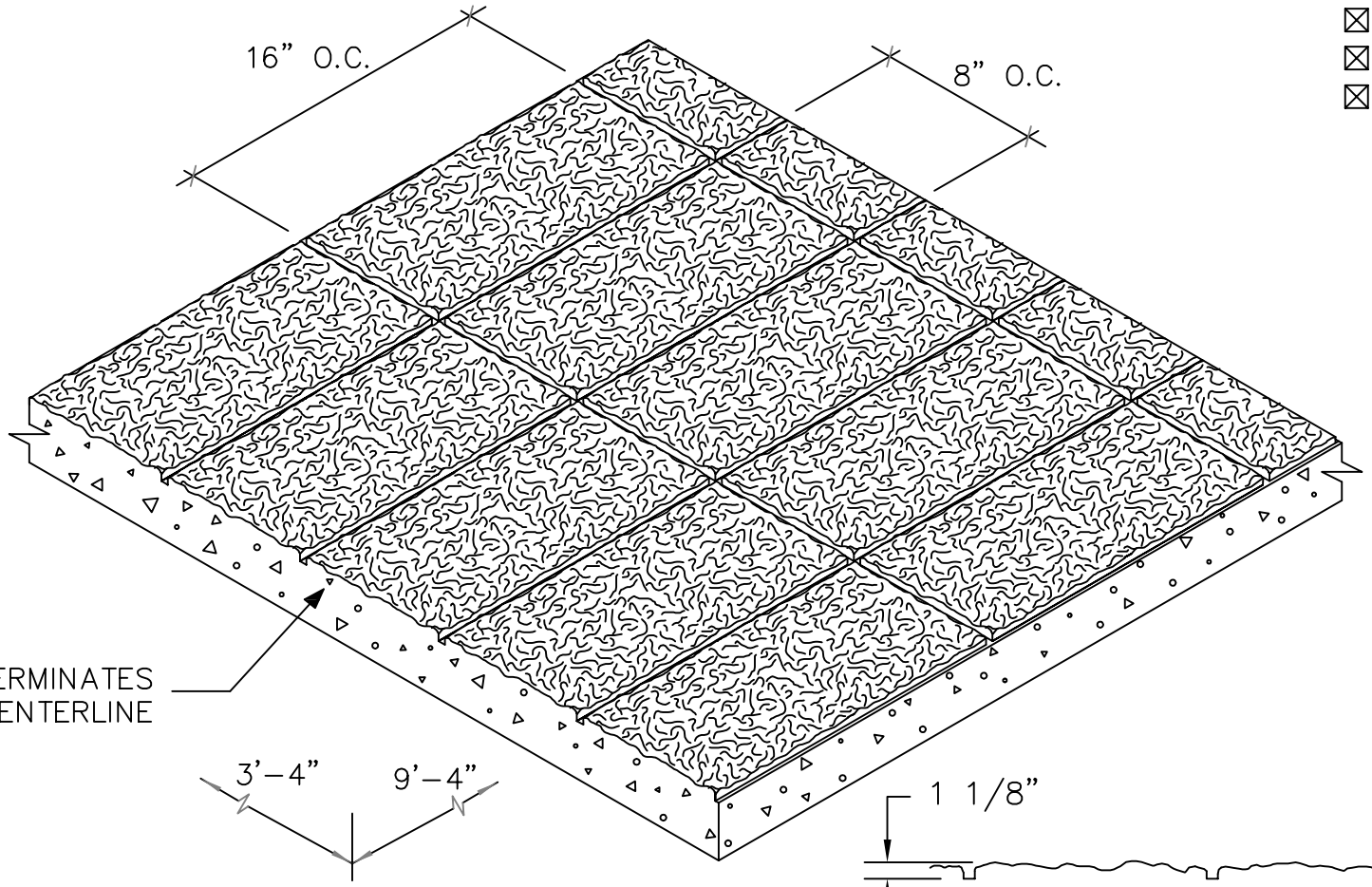

ALL DIMENSIONS NOMINAL

ISOMETRIC VIEW

SCALE: NOT TO SCALE

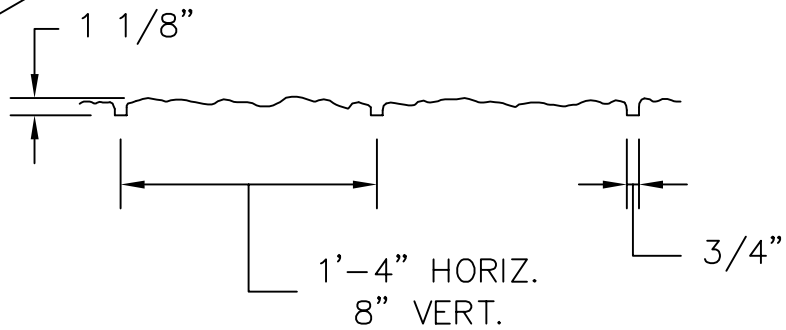

SECTION VIEW

SCALE: 1" = 1'-0"

REV. MARK	REVISION	BY	CHK	APP	DATE

DESIGNED:		DATE:	
DRAWN:		PART NUMBER:	
CHECKED:		QUANTITY REQUIRED:	
APPROVED:		SCALE:	AS SHOWN
MFG. REP.:		DWG. REF. NO.:	SOM449
SHEET NUMBER:			

SOUTHERN METAL & PLASTIC PRODUCTS
3400 TREE CRT. IND. BLVD., ST. LOUIS, MO 63122-6689
PH: 800-325-3597 FX: 636-825-6567
WEBSITE: www.sometals.com

TITLE: #S449 8"x16" SPLIT FACE BLOCK, STACKED BOND

REV