FILE: N:\Group Folders\Engineering\AutoCAD\AutoCAD DWGS\SOM\Form Liner\Web\SOM334.pdf

☒ SINGLE USE
☒ MEDIUM USE
☐ HIGH USE

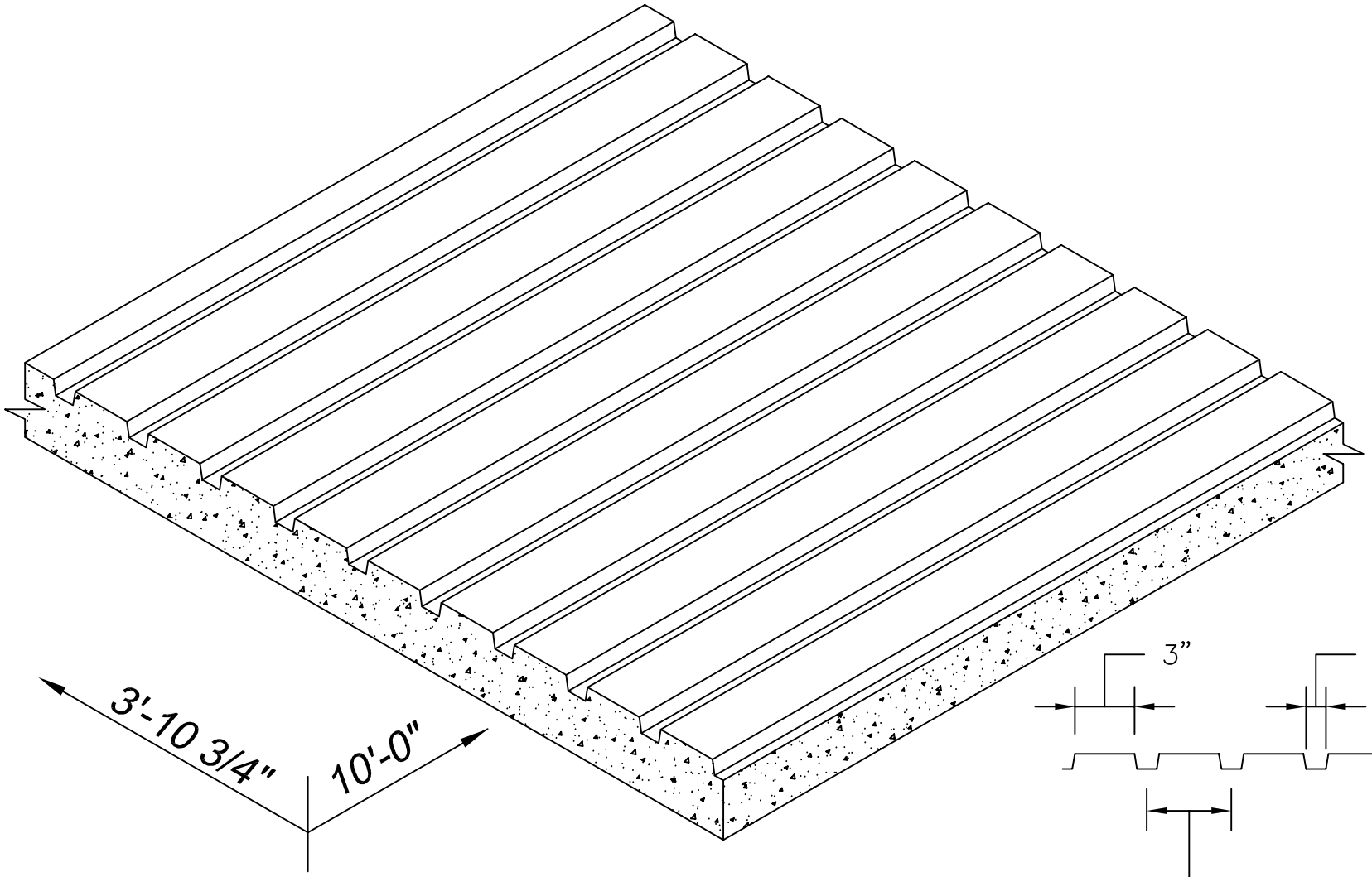


ISOMETRIC VIEW

SCALE: NOT TO SCALE

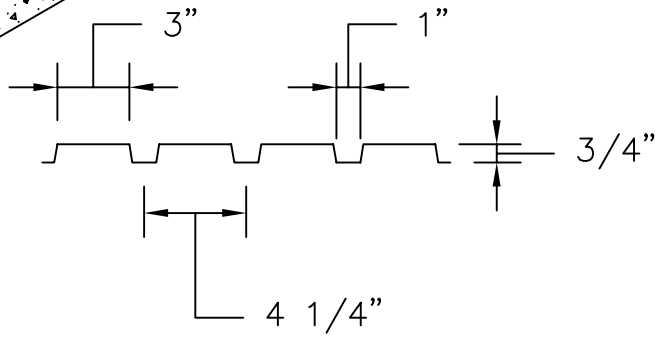


SECTION VIEW

SCALE: 1-1/2" = 1'-0"

| REV. MARK | REVISION | BY | CHK | APP | DATE |
|---|---|---|---|---|---|
| | | | | | |
| | | | | | |
| | | | | | |
| | | | | | |
| | | | | | |

| | |
|---|---|
| DESIGNED: | |
| DRAWN: | |
| CHECKED: | |
| APPROVED: | |
| MFG. REP.: | |
| SHEET NUMBER: | |

| | |
|---|---|
| DATE: | |
| PART NUMBER: | |
| QUANTITY REQUIRED: | |
| SCALE: | AS SHOWN |
| DWG. REF. NO.: | SOM334 |


SOUTHERN METAL & PLASTIC PRODUCTS
3400 TREE CRT. IND. BLVD., ST. LOUIS, MO 63122-6689
PH: 800-325-3597 FX: 636-825-6567
WEBSITE: www.sometals.com


TITLE: #S334 TRAPEZOIDAL RIB

REV