FILE: N:\Group Folders\Engineering\AutoCAD\AutoCAD DWGS\SOM\PVC\Web\52MRweb.dwg

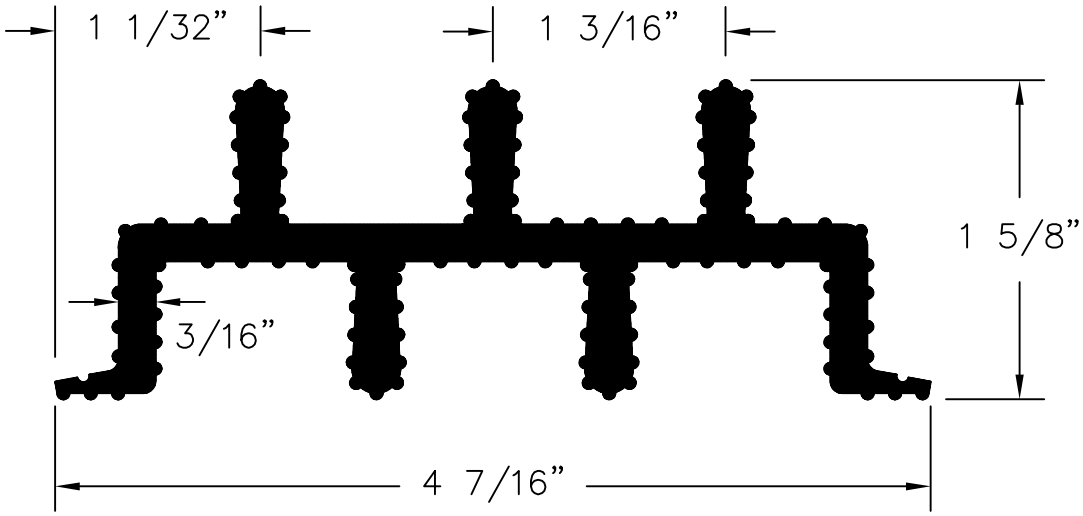

52MR PROFILE

SCALE: NTS

REV. MARK	REVISION	BY	CHK	APP	DATE

DESIGNED:	
DRAWN:	
CHECKED:	
APPROVED:	
FAB. REP.:	
SHEET NUMBER:	

DATE:	
PART NUMBER:	52MR
QUANTITY REQUIRED:	
SCALE:	AS NOTED
DWG. REF. NO.:	52MR

SOUTHERN METAL & PLASTIC PRODUCTS

3400 TREE CRT. IND. BLVD., ST. LOUIS, MO 63122-6689

PH: 800-325-3597 FX: 636-825-6567

WEBSITE: www.sometals.com

TITLE: 52MR – 4 7/16" X 3/16" MULTI-RIB

REV