FILE: N:\Group Folders\Engineering\AutoCAD\AutoCAD DWGS\SOM\PVC\Web\23RCBweb.dwg

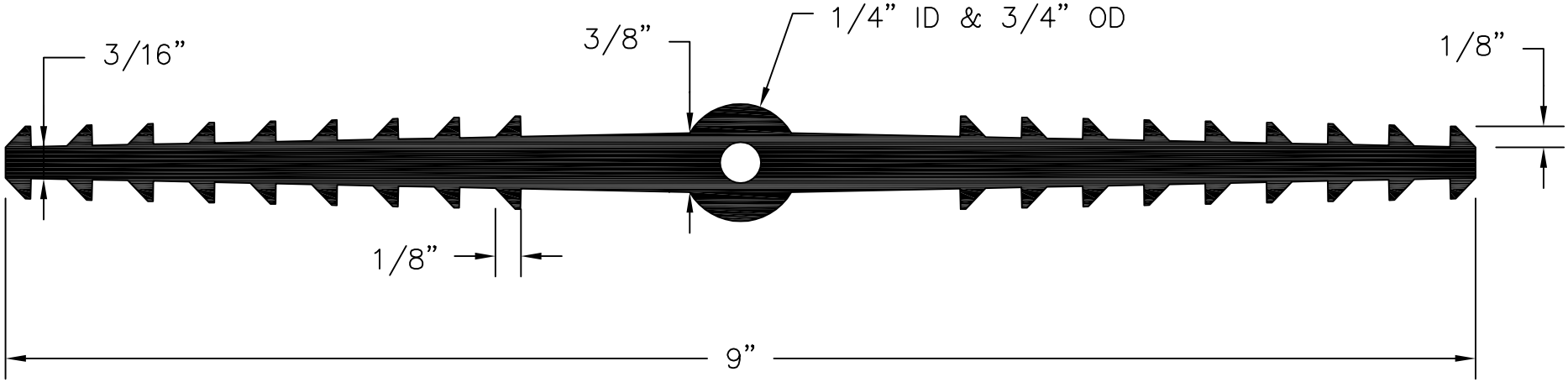

23RCB PROFILE

SCALE: NTS

MONTGOMERY WATSON

REV. MARK	REVISION	BY	CHK	APP	DATE

DESIGNED:	
DRAWN:	
CHECKED:	
APPROVED:	
FAB. REP.:	
SHEET NUMBER:	

DATE:	
PART NUMBER:	23RCB
QUANTITY REQUIRED:	
SCALE:	AS NOTED
DWG. REF. NO.:	23RCB

SOUTHERN METAL & PLASTIC PRODUCTS

3400 TREE CRT. IND. BLVD., ST. LOUIS, MO 63122-6689

PH: 800-325-3597 FX: 636-825-6567

WEBSITE: www.sometals.com

TITLE: 23RCB – 9" X 3/8" RIBBED WITH CENTERBULB

REV