FILE: N:\Group Folders\Engineering\AotuCAD\AutoCAD DWGS\SOM\PVC\Web\20RCBweb.dwg

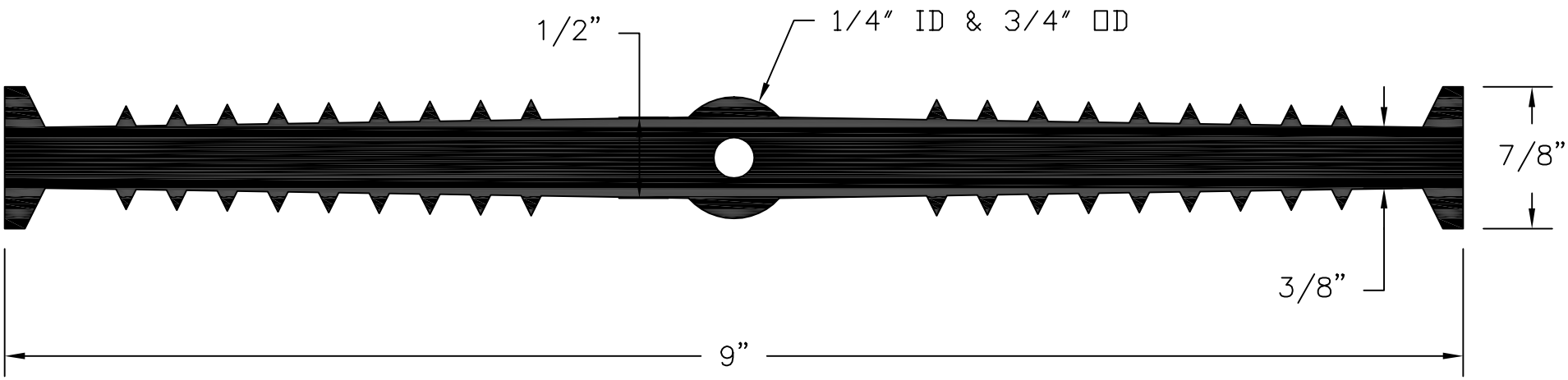

20RCB PROFILE

SCALE: NTS

ONTARIO HYDRO

REV. MARK	REVISION	BY	CHK	APP	DATE

DESIGNED:	
DRAWN:	
CHECKED:	
APPROVED:	
FAB. REP.:	
SHEET NUMBER:	

DATE:	
PART NUMBER:	20RCB
QUANTITY REQUIRED:	
SCALE:	AS SHOWN
DWG. REF. NO.:	20RCB

SOUTHERN METAL & PLASTIC PRODUCTS

3400 TREE CRT. IND. BLVD., ST. LOUIS, MO 63122-6689

PH: 800-325-3597 FX: 636-825-6567

WEBSITE: www.sometals.com

TITLE: 20RCB – 9" X 1/2" RIBBED CENTERBULB

REV